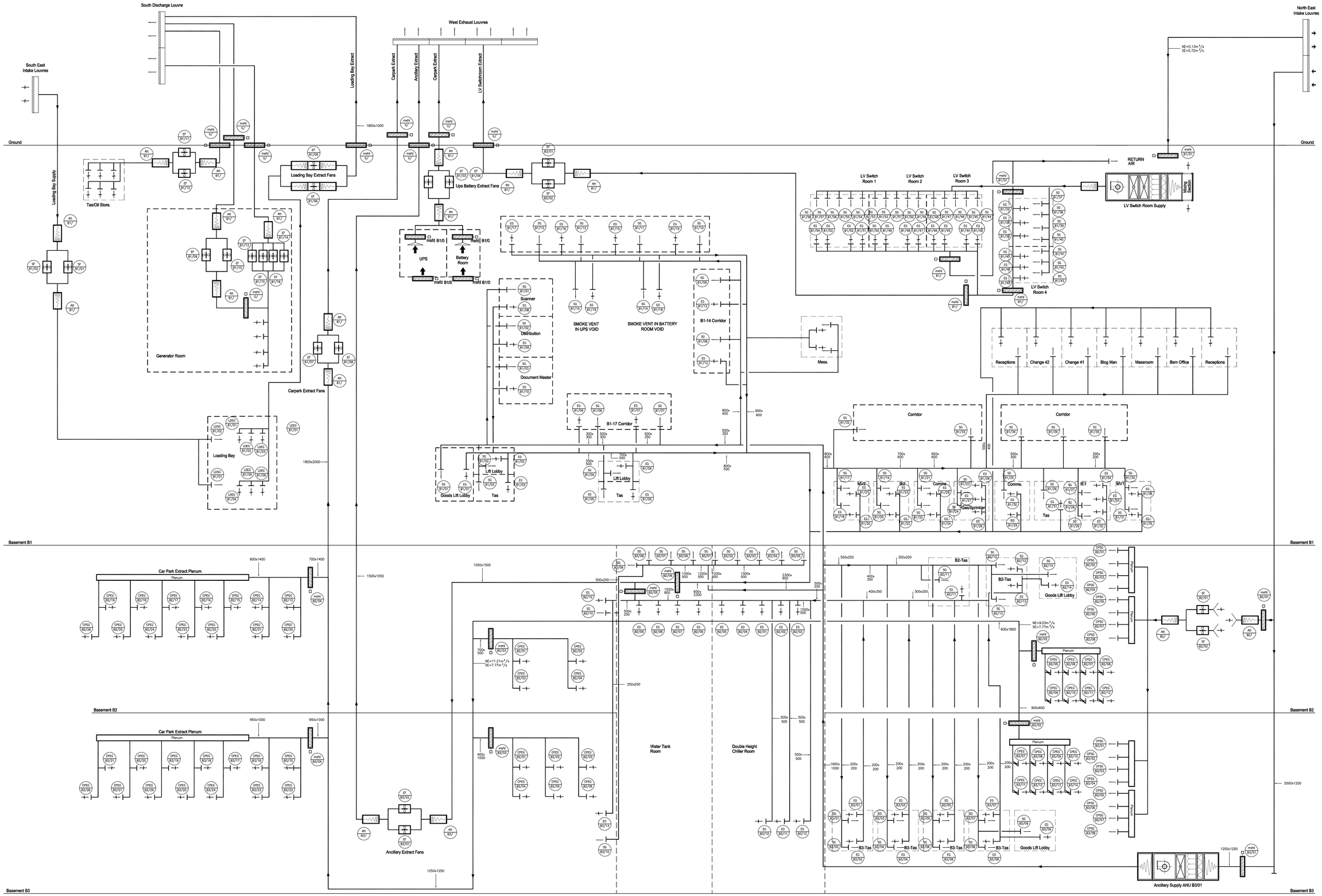
South Discharge Louvre
West Exhaust Louvres
North East Intake Louvres
South East Intake Louvres
Loading Bay Extract
Carpark Extract
Ancillary Extract
Carpark Extract
LV Switchroom Extract
Ground
Ground
Loading Bay Supply
Tas/Oil Store.
Loading Bay Extract Fans
Ups Battery Extract Fans
Generator Room
UPS
Battery Room
Carpark Extract Fans
Scanner
Distribution
Document Master
SMOKE VENT IN UPS VOID
SMOKE VENT IN BATTERY ROOM VOID
B1-14 Corridor
B1-17 Corridor
Mess.
LV Switch Room 1
LV Switch Room 2
LV Switch Room 3
LV Switch Room 4
RETURN AIR
LV Switch Room Supply
Main Section
Receptions
Change 42
Change 41
Blog Man
Messroom
Barn Office
Receptions
Corridor
Corridor
Loading Bay
Lift Lobby
Lift Lobby
Goods Lift Lobby
Tas
Tas
Comms.
Comms.
Gas/Sprinkler
Tas
Basement B1
Basement B1
Car Park Extract Plenum
Plenum
Basement B2
Basement B2
Car Park Extract Plenum
Plenum
Ancillary Extract Fans
Water Tank Room
Double Height Chiller Room
B2-Tas
B2-Tas
Goods Lift Lobby
Plenum
B3-Tas
B3-Tas
B3-Tas
B3-Tas
B3-Tas
Goods Lift Lobby
Ancillary Supply AHU B3/01
Basement B3
Basement B3